CHAPTER 1

PROJECT BACKGROUND

1.1. Background of Study

The study of road vehicle aerodynamics is quite different from aircraft aerodynamics. While most of the studies are mainly about reducing drag, reducing wind noise and noise emissions, some also study on preventing lift forces and unwanted forces that may disrupt the stability of a vehicle mainly at high speed and while cornering. This instability will cause over steer or under steer of the vehicle. Over steer is a condition when the angle of turn is more than required to clear a curve and conversely under steer is when the angle of turn is less than required to clear the curve on steady state.

To create more stability during cornering, the key component is the downforce. This concept is basically similar to the lift of that is required for the flight of an airplane but inversely. In short it could also be called a negative lift. Downforce would create a lateral force against the surface of the road giving more grip and enhancing performance during cornering and also speeding. This force is known as 'aerodynamic grip' that could be a function of car mass, tires, and suspension. The main attribute that affects the downforce is the shape including the surface area, aspect ratio, and cross section of the vehicle. The other aspect is angle of attack or vehicle orientation.

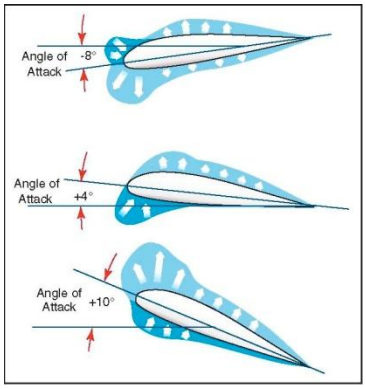

FIGURE 1: Angle of attack on airplanes. [1]

Figure 1 above is the visualization of the angle of attack for an aerofoil. It shows that the angle of attack is calculated from the horizontal line to the angle of which the frontal area is meeting the headwind.

There is another theory that could be exploited to increase the downforce of a vehicle which is the Bernoulli's Principle. According to Bernoulli, for an inviscid flow, increasing speed of the flow would simultaneously decrease the pressure or the fluid potential energy. Implementing this to vehicle aerodynamics if the air flow beneath the vehicle is maximized it would create a very low pressure. The difference in pressure would result in a downwards lateral force or downforce.

For a double decker bus, the value of downforce is could be seen as small or very little comparing to the passenger vehicle. This is due to mainly the frontal area shape and the height of the vehicle. With that fact plus the weight of the vehicle during cornering, it makes the vehicle very unstable and has certain limits for the driving safety of the vehicle.

1.2. Problem Statement

1.2.1. Problem Identification

In order to increase the stability of a ride, the driver must be kept aware of the limitations that the driven vehicle has. With the different in dimensions and technology used, these values differ from car to car let alone a bus or truck. Every type of vehicle has their own driving limitations on different terrains. This is affected by many things like the shape, weight, and height. Though there are many studies on the ability of the passenger car but not many is done for the commercial vehicle.

1.2.2. Significant of the Project

Through this project, a set of data on a typical tourism double decker bus could be obtained. These data could then be used to determine what the limitations of these buses are. Moreover improvements could also be done to the current design so that these limits could be pushed higher for a more efficient ride.

1.3. Objective

- To evaluate the influence of aerodynamic forces on a double decker bus.
- To ascertain the limits of the aerodynamic forces for driving stability.

1.4. Scope of Study

This project would be done in two parts. The first part would be the preliminary research of the basics of aerodynamic theories. During this period it is essential to gain as many knowledge as possible to smoothen the project progress. During this period also the experiment that needs to be done has to be researched. The points that need to be taken into account are the preparation of the model, the windtunnel capability and many more. The model is scaled down to 1:30 so that it could fill in the windtunnel area.

The second part of the project is where the experimentation is done. The model is used to run the windtunnel experiment. After the experiment is done the data is collected using the built is software at the experiment site. The data is than interpreted so that it could be turned into results. The result is than validated using the Adams software by MSC Software Company. The simulation is used to validate whether the calculation done on the data interpretation is correct or there is different value for the experiment.

1.5. The Relevancy of the Project

Double decker buses are becoming more popular nowadays as they increase the passenger capacity thus reducing the trips needed for a certain route. It is good to see companies looking into saving fuel like this but the drivers who treat these vehicles like normal buses are dangerous and need to be aware of the limitations of the vehicle they are driving. This research would help raise the awareness and hopefully different rules would be applied on different variety of buses.

1.6. Feasibility of the Project

This project is divided into three parts, experimental, computer based and calculations. It could really be finished in the given time and the longest part would be preparing the windtunnel model and the computer simulation. The objective could be achieved if the project runs smoothly without any delay.

CHAPTER 2

LITERATURE REVIEW

2.1. Generation of Lift by Road Vehicle

Lift is an important factor in road vehicle aerodynamics, having a strong influence on stability, roadholding, and performance. For an object flying through the air, two factors that affects force lift generated the most are angle of attack and the camber (curvature of the body). Increasing both values would directly increase the lift generated.

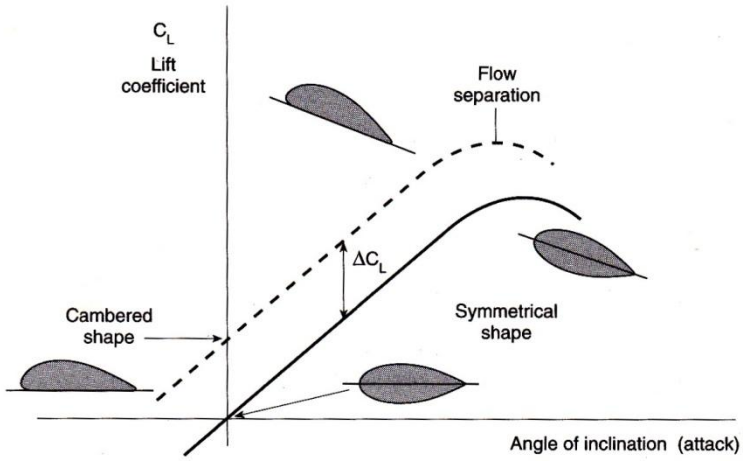

FIGURE 2: Effect of angle of attack, camber, and lift coefficient on an airplane. [2]

Figure 2 above shows that for a free-flying object, lift is produced by inclining a shape to the flow and giving it a cambered (curved) form. The cambered shape gives more lift at any given angle of attack. Therefore to create high lift in the other direction the cambered shape should be kept but the angle of attack should be changed to negative.

For road vehicles proximity to the road has a big effect. If the car is very close and sliding with contact to the road, the air flow on top would have to accelerate and result in low pressure on top. In reality there would always be air flow underneath the vehicle. Sealing the rear and side of the vehicle would expose underside with high stagnant pressure and producing positive lift inversely sealing the front part of

the vehicle ensures that the underbody is at low pressure, producing big downforce or negative lift.

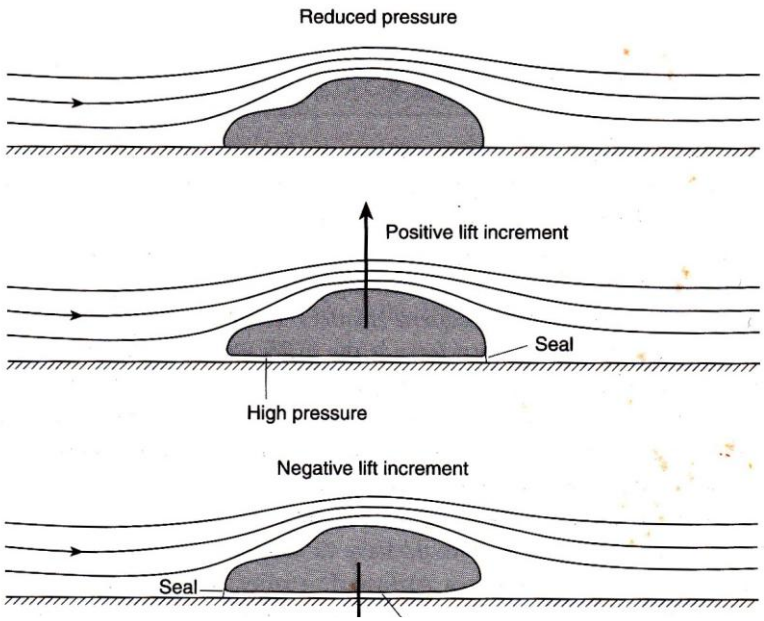

FIGURE 3: Vehicle proximity to road and effects. [2]

Figure 3 above shows three situations regarding the ground effect to a vehicle. A vehicle in sliding contact to the road would generate more lift due to the low pressure on top of the vehicle associated with the high wing velocity. When there is clearance however the lift could be positive or negative depending on whether the underside is vented at the back to create high pressure or vented at the front to create low pressure

From the paper by Jewel B. Barlow, Rui Guterres, and Robert Ranzenbach in their paper titled *Experimental Parametric Study of Rectangular Bodies with Radiused Edges in Ground Effect* [3], to minimize drag for rough configurations regardless of the aspect ratio, the clearance is to be made small, increasing the aspect ratio of drag. There is also a force reversal at some clearance for each configuration. In the range of clearences from his experiment, the rough configuration exhibit very large positive lift as the clearance decreases and at intermediate clearance the lift is negative.

Lift is basically produced when the pressure on top of the vehicle is lower than the pressure underneath it. It is a misconception if said that a lower vehicle would have a

higher downforce or smaller lift. Height does not affect the lift produced by a vehicle but it is rather the pressure difference is the main cause if generated lift.

Lift coefficient is could be calculated by

$$C_{\mathrm{L}} = \frac{L}{\frac{1}{2}\rho v^2 A} = \frac{2L}{\rho v^2 A} = \frac{L}{qA}$$

Where:

C_L is lift coefficient

ρ is fluid density

v is air speed

q is dynamic pressure

A is frontal area

L is the lift force value

Note that for convenience the frontal are is still the projected frontal area even though the lift is more directly related to the plane area.

2.2. Cornering Forces

When a vehicle is cornering, the directions of the wheels are different than the motion. The difference between the orientation of the wheels and the direction of motion is called the slip angle. It may seem like the tyre is sliding slightly relative to the road, but due to the elasticity of the tyre this is not the case. The sideways motion is canceled by the tyre elastically distorting elastically to the region of the contact path. In this condition the tyre could contribute to the cornering force needed to allow centrifugal acceleration. The tyre cornering force increase linearly to slip angle up to a certain point where a maximum is reached.

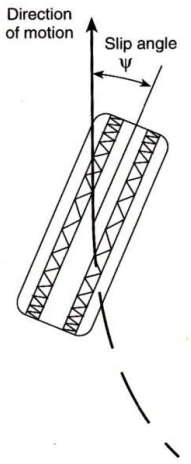

FIGURE 4: Slip angle. [2]

The figure above shows that under cornering, the tyre does not point towards the exact direction of the motion. The angle is called slip angle but this does not mean that the tires has to slide. The cornering motion is caused by the sum of the centripetal and centrifugal force. These forces are perpendicular to each other and have different value resulting in the cornering motion.

2.3. Influence of Aerodynamic Lift on Acceleration

At low speeds, the traction force available at the road is limited by the adhesion (amount of tangential force that the wheel can apply without spinning) and not by power.

Increasing the load of the vehicle would not increase the acceleration because the inertia would be increased due to the increased mass, making more traction force required. However if the down load is increased by aerodynamic means (increasing downforce) no additional inertia is generated and greater acceleration could be achieved with sufficient power. The traction force could also be increased and the degree of slipping could be increased.

2.4. Influence of Aerodynamic Downforce on Cornering

Since the maximum side force is directly proportional to the download of the tyre, adding aerodynamic downforce would clearly increase the adhesion of the tyre. The force available for centrifugal acceleration would increase and the downforce would be equally distributed through the four tyres.

Adding weight to the vehicle would not increase the cornering ability. The side force produced by wheels increases with weight but centrifugal force required $(W/g) \times (V^2/r)$ also increases with mass (W/g) therefore the weight cancels it off. The weight may actually decrease the cornering ability as it may affect the center of gravity and increase the possibility of overturned vehicle. Increasing the aerodynamic downforce however would increase the down load on the tyre and allow a higher centrifugal acceleration (V^2/r) because more force is available without addition of mass. This means a higher cornering speed may be used.

2.5 Effects of Drafting

From the paper by S. Watkins and G titled *The Effect of Vehicle Spacing on the Aerodynamics of a Representative Car Shape* [4] they concluded that despite drafting being generally being recognized as a method to reduce drag, their studies shows that a very close spacing could result in drag penalties. Thus the combined drag of a number of isolated vehicles has the potential to become lower than the same number of close-coupled convoy.

They also found very significant changes in lift for close spacing and these changes has been revealed to be the effect of rear vortices.

CHAPTER 3

METHODOLOGY

3.1. Research Methodology

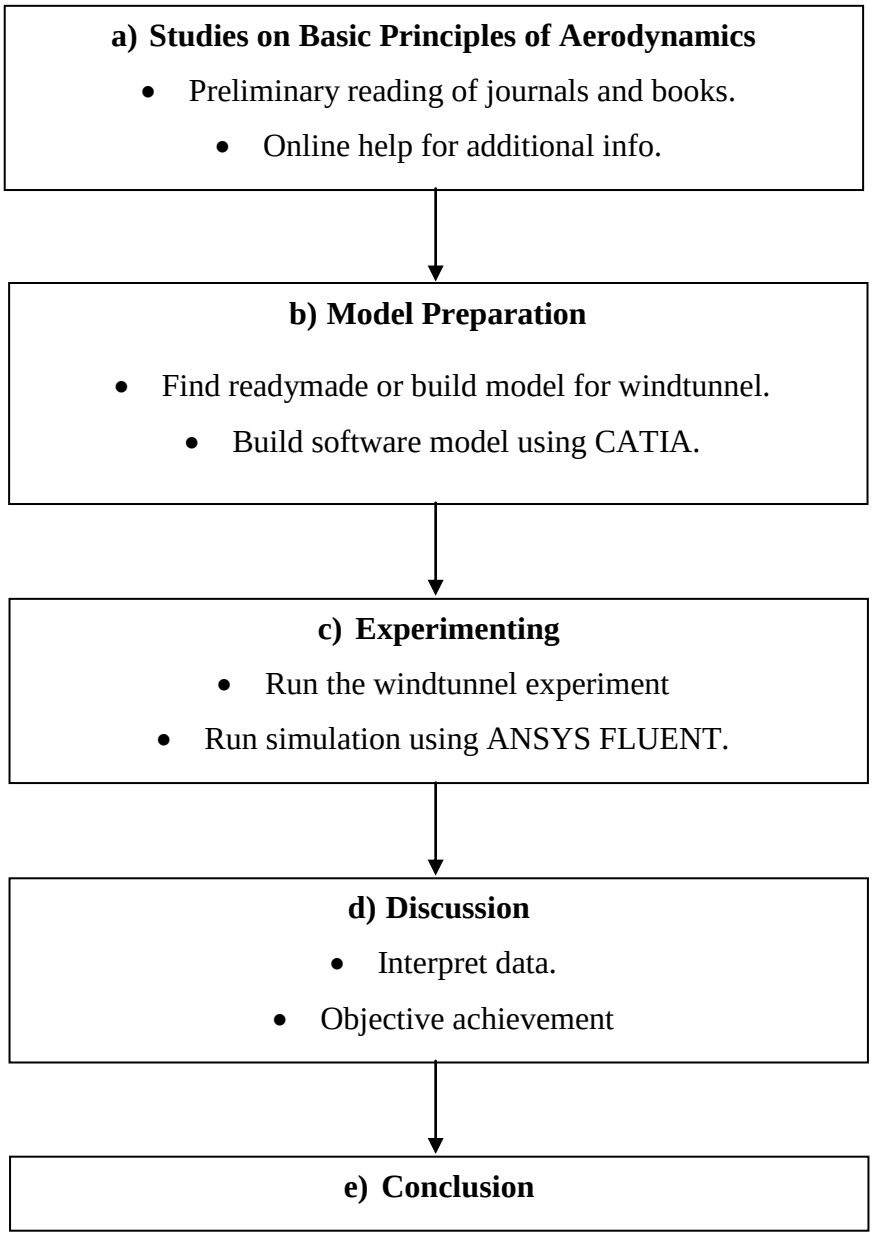

FIGURE 5: FYP methodology flow chart

3.2. Project Activities

Table 1: Activities planned for Final Year Project

Activities	Start	Finish
Studies on aerodynamic concepts	13 June 2011	24 June 2011
Proposal defense	27 June 2011	15 July 2011
Prepare model for windtunnel experiment	18 July 2011	12 August 2011
Interim report	15 August 2011	2 September 2011
Prepare model for Adams simulation	26 September 2011	7 October 2011
Run the windtunnel experiment	10 October 2011	21 October 2011
Data interpretation	24 October 2011	28 October 2011
Result validation	31 October 2011	4 November 2011
EDX Preparation	14 November 2011	25November2011
Report Documentation	21 November 2011	30 December 2011

3.3. Gantt Chart and Key Milestone

Table 2: Gantt Chart and Key Milestone for Final Year Project

	FYP1									FYP2								
Activities and Milestones	3	4	5	6	7	8	9	10	11	1	2	3	4	5	6	7	8	9
Studies on aerodynamic concepts																		
Prepare model for windtunnel experiment																		
Prepare model for FLUENT simulation																		
Model preparation done																		
Run the windtunnel experiment																		
Run simulation																		
Data interpretation																		
Experimental results done																		
Modify stock model for software simulation																		
Run simulation on modified model																		
Recommendation on improvements done																		
Report Documentation																		

3.4. Tools and Equipments

In this project, only two major tools are used which is the windtunnel and a computer. Experimentation is done in the windtunnel and software which is Adams is used for simulation purposes as comparison to the experimental data obtained.

CHAPTER 4

RESULTS AND DISCUSSION

4.1 Experimental Results

The data gathering of this project is performed in the windtunnel laboratory. From the windtunnel experiment, values of aerodynamic drag and lift according to the relative velocity created by the rotating fan. The data is collected by varying the speed of the fan because it is the most reliable value that could be controlled. For this experiment the value of the fan speeds are between 2000 RPM to 4000 RPM and resulting in relative speed from 19 m/s to 38 m/s. The speed used is not taken from a very low point because the aerodynamic forces could not be seen in these low speed. Aerodynamic forces are more dominant in highway cruising speed therefore it is better to take these speeds rather than the low speed. The data table from the experiment is:

Table 3: Experiment Results

Fan Speed (RPM)	Air Velocity (m/s)	Drag (N)	Downforce (N)
2000	19.96	1.66	0.89
2200	21.63	2.57	1.35
2400	23.15	2.79	1.56
2600	26.03	3.09	2.14
2800	28.61	3.64	2.24
3000	30.53	3.70	2.36
3200	32.61	3.92	2.66
3400	34.28	4.06	2.76
3600	36.16	6.43	3.07
3800	37.52	6.81	3.02
4000	38.67	6.70	3.12

From the table we could determine the velocity of the real vehicle which was modeled by the scale of 1:30 by assuming similarity of dynamic properties between the model and the real vehicle.

$$\mathrm{RE_m} = \mathrm{RE_R}$$

$$\frac{V_{\infty m} l_m}{\upsilon} = \frac{V_{\infty r} l_r}{\upsilon}$$

$$V_{\infty r} = \frac{V_{\infty m} l_m}{l_r}$$

It is known that l_m/l_r is equal to 1/30 therefore the equation would become

$$V_{\infty r} = \frac{V_{\infty m}}{30}$$

After the calculation we could get this table

Table 4: Relative real velocity

Model Velocity (m/s)	Real Velocity (m/s)	Drag (N)	Downforce (N)	C_d	C_l
19.96	0.665	1.66	0.89	0.658552	0.353079
21.63	0.721	2.57	1.35	0.867337	0.455605
23.15	0.772	2.79	1.56	0.821287	0.459214
26.03	0.868	3.09	2.14	0.719522	0.49831
28.61	0.954	3.64	2.24	0.701665	0.431794
30.53	1.018	3.70	2.36	0.626371	0.399523
32.61	1.087	3.92	2.66	0.582039	0.394955
34.28	1.143	4.06	2.76	0.545204	0.370631
36.16	1.205	6.43	3.07	0.776894	0.370928
37.52	1.251	6.81	3.02	0.76341	0.338546
38.67	1.289	6.70	3.12	0.707447	0.329438

The drag and lift coefficient were found using similar equation. The only difference is using consecutive forces for each value.

$$\mathrm{C_d} = \frac{2F_d}{\rho A_f V_{\infty r}^2}$$

$$\mathrm{C_l} = \frac{2F_l}{\rho A_f V_{\infty r}^2}$$

Averaging the value of C_d and C_l from Table 4 we get

$$\mathrm{C_d} = 0.706339$$

$$\mathrm{C_l} = 0.400184$$

With the average value of C_d and C_l we could calculate the theoretical value of the aerodynamic downforce at any given speed by this equation:

$$F_l = \frac{1}{2}\mathrm{C_l} A_f \rho V_\infty$$

Table 5: Experimental Negative Lift Force (0 km/h < V < 110 km/h)

Relative speed (km/h)	Relative Speed (m/s)	Negative Lift (N)
0	0.0000	0.0000
10	2.7778	17.6054
20	5.5556	70.4216
30	8.3333	158.4486
40	11.1111	281.6864
50	13.8889	440.1350
60	16.6667	633.7945
70	19.4444	862.6647
80	22.2222	1126.7457
90	25.0000	1426.0375
100	27.7778	1760.5402
110	30.5556	2130.2536

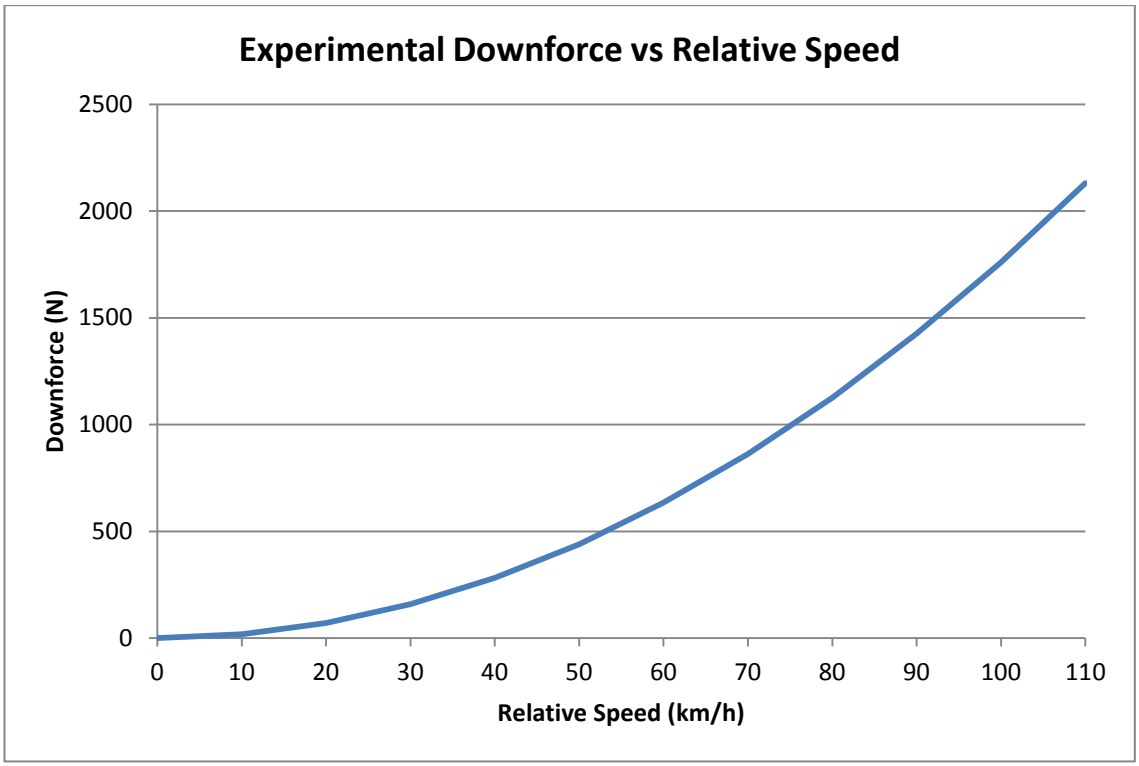

Figure 6: Downforce vs Relative Speed Graph (Experimental)

On the other hand, the aerodynamic drag could be obtained through this equation:

$$F_d = \frac{1}{2} \mathrm{C_d} A_f \rho V_\infty$$

Table 6: Experimental Drag Force (0 km/h < V < 110 km/h)

Relative Speed (km/h)	Relative Speed (m/s)	Drag Force (N)
0	0.0000	0
10	2.7778	31.073022
20	5.5556	124.29209
30	8.3333	279.65719
40	11.1111	497.16835
50	13.8889	776.82554
60	16.6667	1118.6288
70	19.4444	1522.5781
80	22.2222	1988.6734
90	25.0000	2516.9148
100	27.7778	3107.3022
110	30.5556	3759.8356

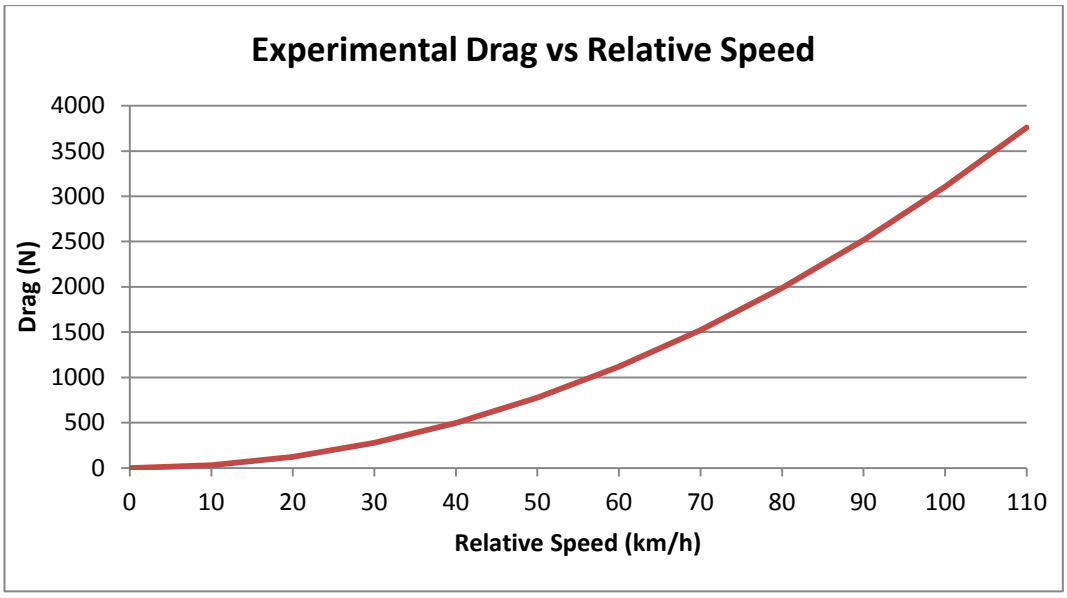

Figure 7: Drag vs Relative Speed Graph (Experimental)

Figure 6 and Figure 7 above shows the trendline of the aerodynamic lift and aerodynamic drag reaction to its relative speed. As seen above the aerodynamic forces are more dominant on higher speed as it increases exponentially against relative speed. The results also shows that the aerodynamic drag velues are more dominant as the values are almost twice from the aerodynamic lift.

4.2 Simulation Results

The simulation is done using various software tools. Firstly the model of the bus in a windtunnel is created using the modeling tool CATIA. After that it is exported to the GAMBIT software. Here the model is meshed and few properties of the model are pinpointed, such as inlet and outlet airflow, and wall type. After the process in GAMBIT is finished the product is again exported to ANSYS FLUENT program for simulating purposes. The simulation is than set up for 2000 iterations. After that is done the forces on the model are:

Table 7: Simulation Results

Direction	Pressure Force (N)	Viscous Force (N)	Total Force (N)
y	-757.37292	-5.7559	-763.12882
x	6891.9292	288.5462	7180.4754
z	-188.86937	0.674568	-188.1948

When the simulation is finished, the scaled residual for part of the simulation process graph is:

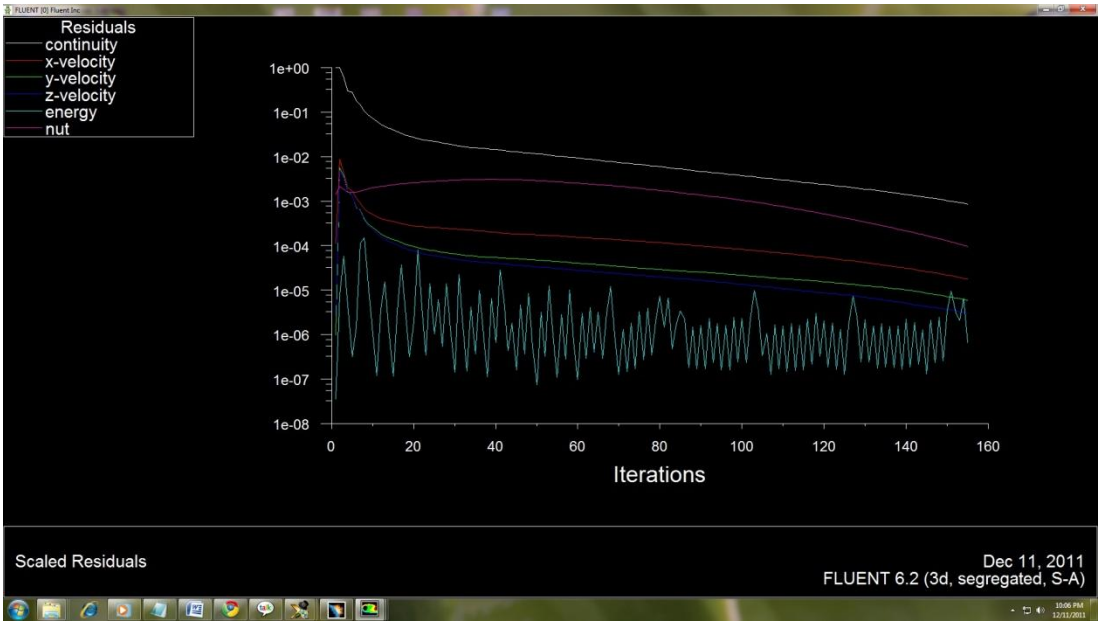

Figure 8: Scaled Residual of Simulation Process

Figure 8 above shows how the residual are less when more iteration is done. This proves that more iteration could result in a more accurate result.

To get a better view of the simulation process, the figure of dynamic pressure at the end of the simulation is captured. This figure is used to determine the value of Cd and Cl using the equation:

$$F_l = \mathrm{C_l} \times A_f \times P_{dyn}$$

$$F_d = \mathrm{C_d} \times A_f \times P_{dyn}$$

Where P_{dyn} is the dynamic pressure and A_f is the frontal area. These equations are rearranged to find the drag coefficient C_d and lift coefficient C_l.

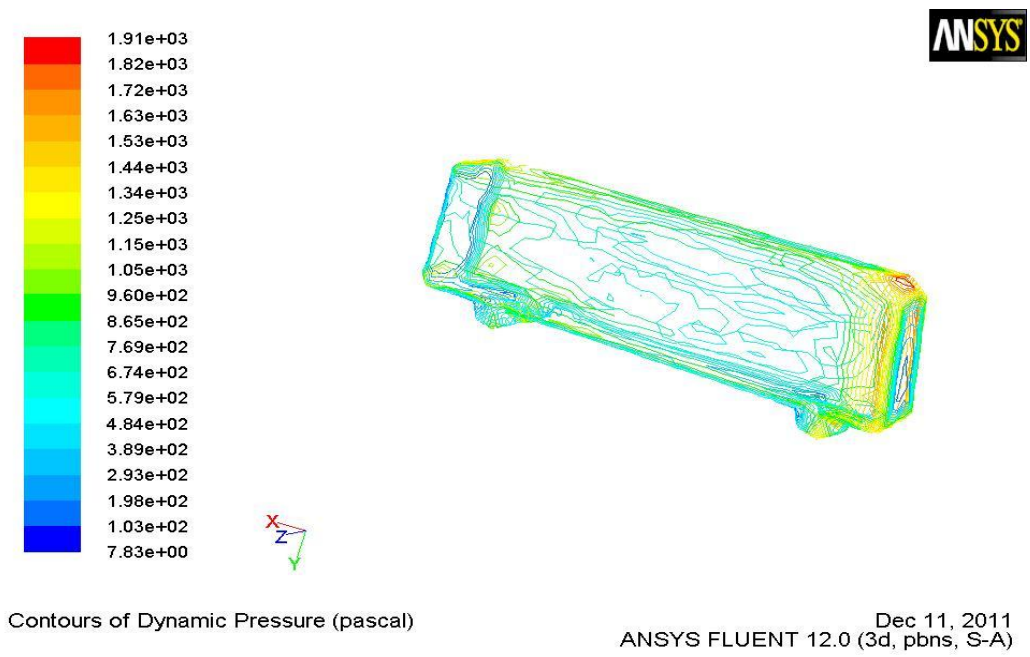

Figure 9: Contours of Dynamic Pressure

The dynamic pressure could be obtained from Figure 9 which is 1.91×10^3 Pascal. Forces values are obtained in Table 7 and it is known that the drag force acts on the X-direction and lift force acts on the Y-direction. The simulation is done using the real scale of the vehicle therefore the frontal area would be 9.5 meters. Solve the equation for C_d and C_l and get:

$$C_l = \frac{(-763.12882)}{(9.5)(1.91 \times 10^3)}$$

$$C_l = (-0.0421)$$

$$C_d = \frac{7180.4754}{(9.5)(1.91 \times 10^3)}$$

$$C_d = 0.395$$

Here the value of lift force is negative because it is acting downwards rather than upwards. From the value of C_l and C_d, the value of aerodynamic drag and lift forces could be calculated at any given speed. The equations are:

$$F_l = \frac{1}{2} \mathrm{C_l} A_f \rho v_\infty^2$$

$$F_d = \frac{1}{2} \mathrm{C_d} A_f \rho v_\infty^2$$

Therefore from these equations, the tables; Table 8 and Table 9 are obtained.

Table 8: Simulated Negative Lift Force (0 km/h < V < 110 km/h)

Relative Speed (km/h)	Relative Speed (m/s)	Negative Lift (N)
0	0.0000	0.0000
10	2.7778	1.8574
20	5.5556	7.4298
30	8.3333	16.7170
40	11.1111	29.7192
50	13.8889	46.4362
60	16.6667	66.8681
70	19.4444	91.0149
80	22.2222	118.8766
90	25.0000	150.4532
100	27.7778	185.7447
110	30.5556	224.7511

These values are taken and a graph is built to see the trend against the relative speed, similar to what is done for the experimental results. Before all that the table for the aerodynamic drag of the simulated results is made.

Table 9: Simulated Drag Force (0 km/h < V < 110 km/h)

Relative Speed (km/h)	Relative Speed (m/s)	Drag Force (N)
0	0.0000	0.0000
10	2.7778	17.4772
20	5.5556	69.9088
30	8.3333	157.2948
40	11.1111	279.6352
50	13.8889	436.9300
60	16.6667	629.1792
70	19.4444	856.3828
80	22.2222	1118.5409
90	25.0000	1415.6533
100	27.7778	1747.7201
110	30.5556	2114.7413

One graph is made from each table to have a better look at the trends of the aerodynamic forces that acts on the vehicle.

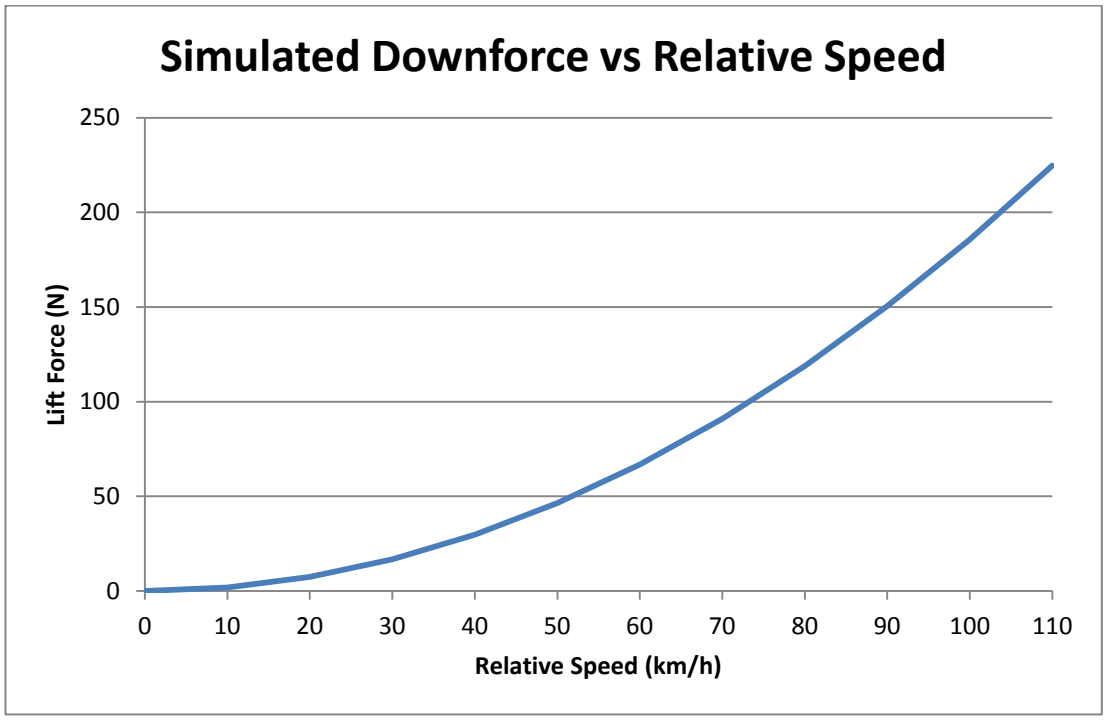

Figure 10: Negative Lift vs Relative Speed Graph

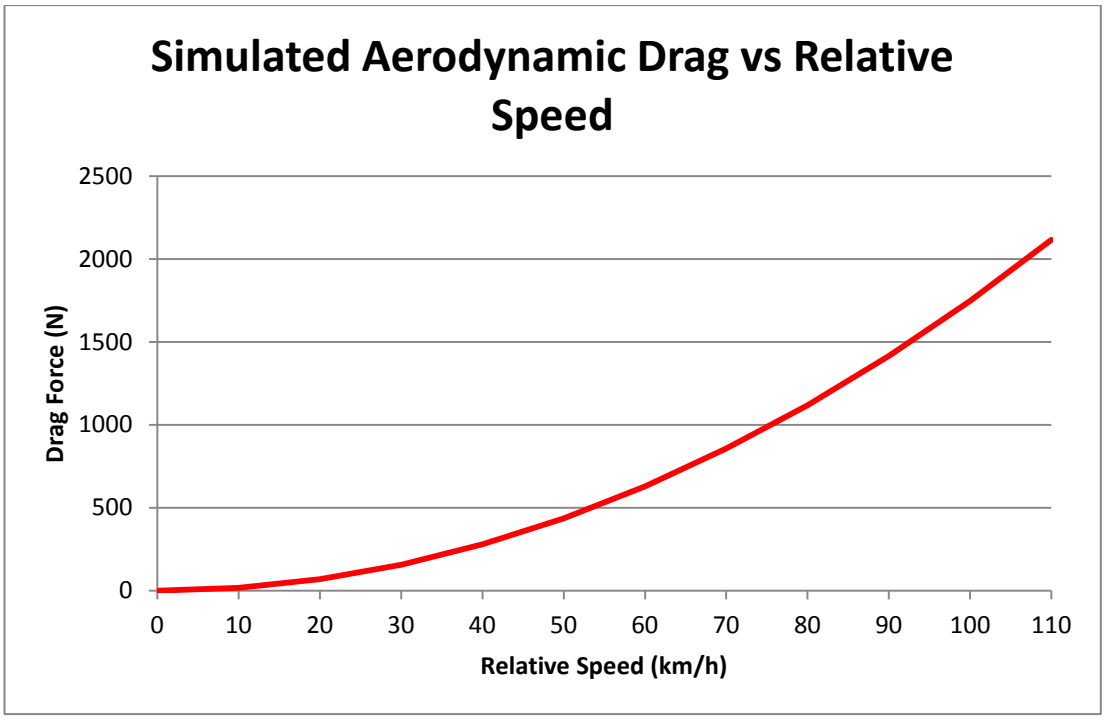

Figure 11: Drag vs Relative Speed Graph (Simulated)

Figure 10 and Figure 11 above shows the trendline of the aerodynamic lift and aerodynamic drag obtained from the simulation process. The trend is similar to the one obtained from the experimental work. Even though similar trends, the value are way off as the calculated C_d and C_l are way different comparing the two results. Nevertheless, the aerodynamic force value is still a lot higher than the aerodynamic lift values.

4.3 Data Interpretation

The sliding condition could be calculated by using the condition for circular motion. In this project, the vehicle is considered as a rigid body, neglecting the effect of the suspension of the double decker bus.

The theory is that when an object is moving on a circle of a radius with constant speed is actually accelerating. The direction of the velocity vector is changing while the magnitude is constant. The acceleration has a magnitude of v^2/r (where v is velocity and r is radius) and the direction is towards the center of the circular motion.

This is called the centripetal acceleration. When the vehicle is moving, the force of static friction, F_s reacts so that it does not slide and the equation of static friction is:

$$F_s = \mu_s \times W$$

Where μ_s is the coefficient of static friction. In this case the negative lift is taken into account; therefore the longitudinal force is modified into $W = (mg) + (F_l)$, by using the absolute value of the Lift Force as it is acting in the same direction of the weight of the vehicle (mg). For the vehicle to remain steady and not sliding, the centripetal acceleration force must not exceed the side force; such as $\frac{mv^2}{r} > (\mu_s \times (mg + F_l))$ will result in sliding of the vehicle. With this, it could be said that the boundary of these forces is when:

$$(\mu_s \times (mg + F_l)) - \left(\frac{mv^2}{r}\right) = F_c$$

Where F_c is the side force calculated. For this project, the μ_s is taken to be 0.75, which is the average value between rubber and dry asphalt. As seen on the equation above, another variable in the equation is the radius of the corner. For this project various radius of cornering is assumed which are 5 meters, 10 meters, 15 meters, and finally 20 meters. Calculations are done on both the experimental and simulated results obtained previously through the windtunnel and ANSYS FLUENT simulation. The purpose is that these two results has very different readings, therefore the data could be used to see if the aerodynamic downforce has any significance on the equation. The vehicle would start sliding when the side force is less than 0.

Table 10: Side Force (Experimental)

		R = 5m	R = 10m	R = 15m	R = 20m
Relative Speed (km/h)	Negative Lift (N)	Side Force (N)	Side Force (N)	Side Force (N)	Side Force (N)
0	0.00	133492.23	133492.23	133492.23	133492.23
10	17.61	105505.91	119505.67	124172.26	126505.56
20	70.42	21546.93	77545.99	96212.35	105545.52
30	158.45	-118384.69	7613.19	49612.48	70612.13
40	281.69	-314288.96	-90292.73	-15627.32	21705.38
50	440.14	-566165.89	-216171.78	-99507.07	-41174.72

Table 11: Side Force (Simulated)

		R = 5m	R = 10m	R = 15m	R = 20m
Relative Speed (km/h)	Negative Lift (N)	Side Force (N)	Side Force (N)	Side Force (N)	Side Force (N)
0	0.00	133492.23	133492.23	133492.23	133492.23
10	1.86	105494.10	119493.86	124160.45	126493.75
20	7.43	21499.69	77498.75	96165.10	105498.28
30	16.72	-118490.99	7506.89	49506.19	70505.83
40	29.72	-314477.94	-90481.71	-15816.30	21516.41
50	46.44	-566461.16	-216467.05	-99802.35	-41469.99

From the tables above, it is seen that the limits are different for different radius of cornering. To get the exact value of the relative speed, take the range of where the slide force value turns from positive to negative. The calculated speed at which the vehicle would be stable just before sliding is:

Table 13: Max Speed According to Cornering Radius (Experimental)

Radius (m)	Max Speed (km/h)
5	21
10	30
15	37
20	43

Table 13: Max Speed According to Cornering Radius (Simulated)

Radius (m)	Max Speed (km/h)
5	21
10	30
15	37
20	43

4.4 Experimenting and Modeling

The apparatus that was used for this experiment were a scaled model of the real double decker bus, the windtunnel machine, a data collector in a computer, a screwdriver and a mounting rod. The model was hand made using a polystyrene board and shaped according to a scale of 1:30 from the real bus. As the model was

unique to the regular experiment models used in the laboratory, a custom mount and mounting rod had to be made. The mounting rod was made from a 13 cm mild steel rod using the traditional lathe machine.

The procedure of the experiment was:

1. The model was mounted. It was also checked so that it was not in an inclined state.
2. All parts at the machine properly secured and loose bolts were tightened.
3. The blower fan is turned on.
4. Data collector software opened and reset to zero for the readings.
5. The fan speed was adjusted using the speed knob.
6. Get the readings from the data gathering software.
7. Turn the speed controller slowly and move to the next speed required.
8. After getting all the data needed, slowly decrease the fan speed until the motor speed is zero.
9. Cool down the motor manually by using an external fan but do not turn off the motor yet.
10. After the motor is cooled, switch it off and do proper housecleaning.

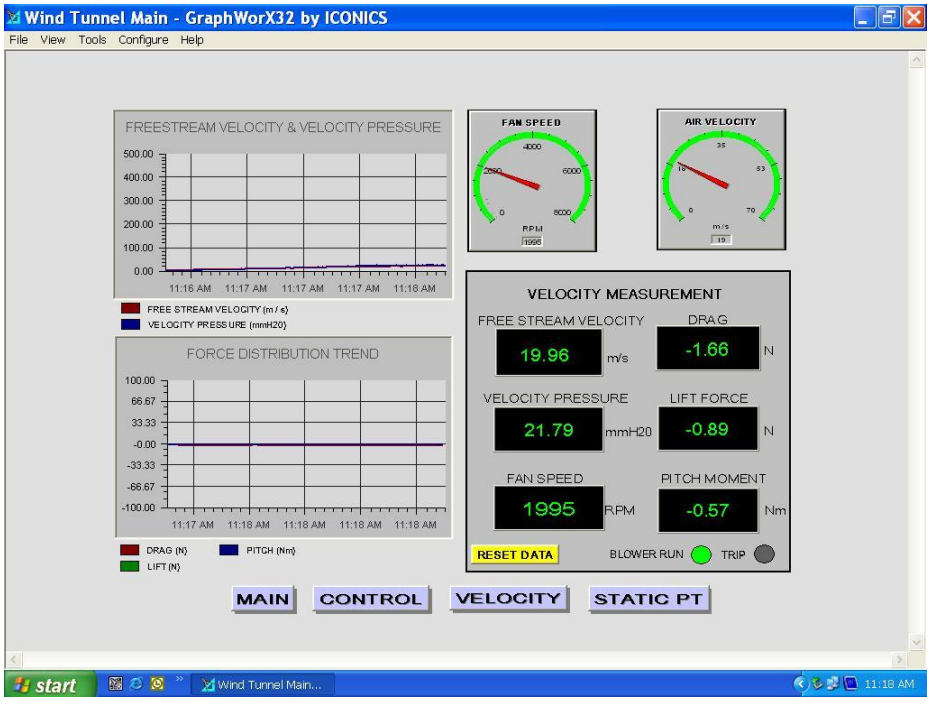

Figure 12: Experimental Data – 2000 RPM

Figure 12 above shows the example of a reading obtained using the windtunnel machine. As seen the reading gives the value of aerodynamic drag, aerodynamic lift pitch moment, and also the relative velocity. From these values, calculate the value of the C_d and C_l accordingly for each reading and take the average to find the acceptable values.

For the simulation process, few software are used; CATIA, GAMBIT, and ANSYS FLUENT. Every step using these softwares are important as each step plays a vital role and dimensioning in each software has to be the same for an accurate result. The steps for this part of the project are:

1. Rough sketch and dimensioning of the model on a piece of paper.
2. Using CATIA, model the double decker bus inside a windtunnel.
3. Export the completed file in the format appropriate for the GAMBIT software
4. Import the file into GAMBIT and mesh.
5. Define the properties of the model such as density, air inlet and outlet, and volume.
6. Save the completed work into a file that could be read in FLUENT.
7. Import the data file and set the parameters of the simulation.
8. Run the simulation and wait for the results.

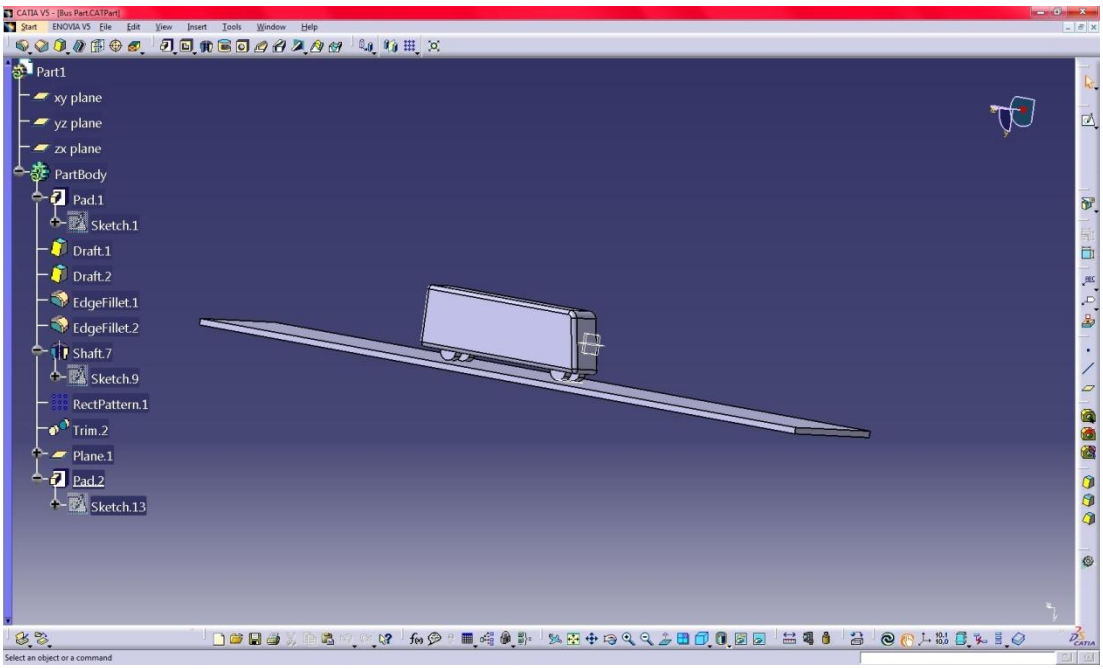

Figure 13: Model for simulation in CATIA

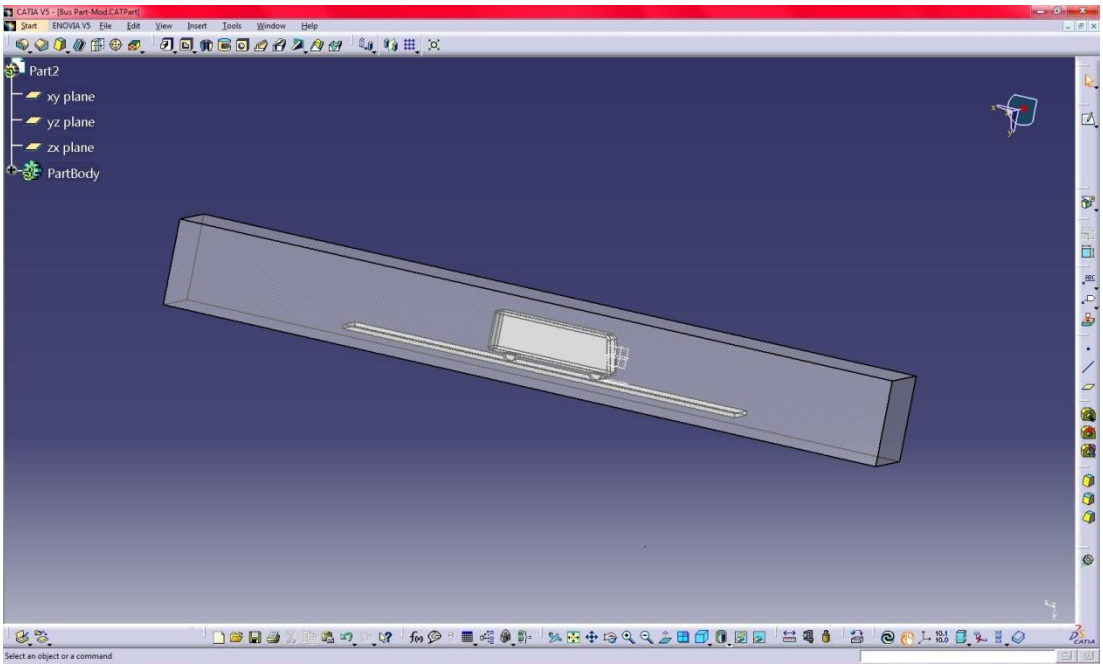

Figure 14: Model for simulation in CATIA (after Boolean operation)

Figure 13 and Figure 14 above shows the model that was created in the CATIA software. The bus model is built on a flat surface to indicate the ground effect of the vehicle. This would improve the accuracy of the reading relative to the real life condition. It is important to ensure that the road is made static so that it is not subjected to the aerodynamic force.

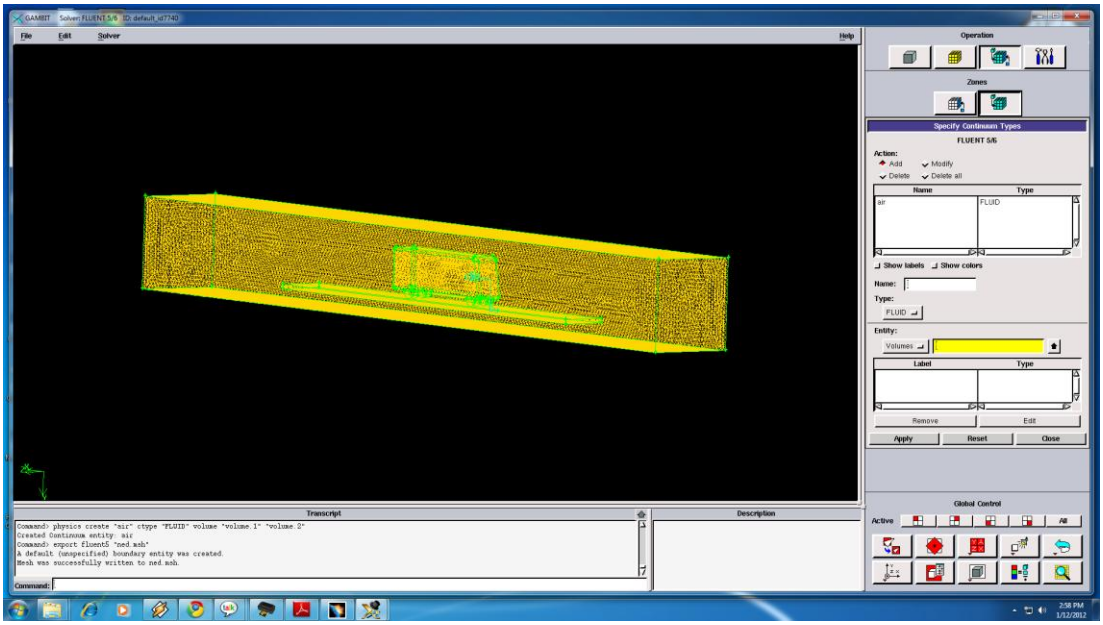

Figure 15: Meshing Visual

Figure 15 above shows how the model is meshed into 8000 elements. The walls are determined and the road is set to be static so it is not subjected to the aerodynamic forces. Set a separate wall for the bus model and the road for this purpose. Indicate where the air inflow and the air outflow are so that the readings obtained would be correctly sign as the force is a vector.

For the simulation process using the FLUENT software, standard guidelines are used. The basic steps are done and finally the simulation is run for 2000 iterations.

5.4 Discussion

The experiment part had many problems to start. First was to create a model small enough to fit in the windtunnel but not so small so that when the calculation for the relative velocity of the real vehicle, it would not be too small.

While running the experiment, vibrations could be seen on the model. This is probably due to the material used to make the model not heavy enough and the connection is not rigid enough. To get confirmation of this situation a computer simulation must be done so that the results could be verified. After the simulation is done further calculation could be done on both results and compared to see the similarities or difference between the two results. For a better result the experiment should be done on a 1:1 scale model but because of the constraints of the project it could not be done.

When the results of the experiment and simulation are compared, a huge difference could be detected, indicating the error of the experiment which has high error. This verifies that there are many factors that affect the experiment that is done making the results less reliable. In this project the difference in the C_l obtained is about 10 times lower in the simulation compared to the experimental results.

Even though the data acquired from the experiment and simulation are different, the end result could be seen as the same. When the max speed during cornering before sliding of the double decker buss is calculated, the same value comes out. This shows that the downforce is too small compared to the mass of the double decker bus, hence

making it negligible. It would be a different case for a light vehicle as the contribution of this force might be more significant.

From the interpretation of the data, it is seen that the max speed would vary with the changing radius of cornering. Therefore the cornering radius is made into a variable and the resulting speed obtained for a radius from 5 meters to 20 meters is from 21 km/h to 43 km/h.

This project is also done by assuming that the double decker bus has a rigid body, neglecting the presence of suspensions. By considering the suspension system, the max speed of the cornering motion would increase as the suspension will act as a support and reduce the mass while cornering in the equation mv^2/r allowing higher V; which is velocity.

CHAPTER 5

CONCLUSION AND RECOMMENDATION

5.1 Conclusion

From the experimental and simulation work done, the forces acting on the model could be seen. We could see a trend where the forces are more dominant on high speed tallying the equation of:

$$F_l = C_l \rho \frac{A_f}{2} v_\infty^2$$

The aerodynamic forces could be seen to be more dominant at high speed rather than slow speed. It could be concluded that for urban driving, less aerodynamic forces would act towards the vehicle and more would be present on highway driving. Overall aerodynamic forces act towards all direction of the vehicle. There is aerodynamic drag which acts from the front of the vehicle. This force acts horizontally through the body of the vehicle. Besides that is the aerodynamic lift which acts vertically. This value is mostly negative for ground vehicle so that the vehicle would not have the tendency to flip over at high speed. Finally there is the pitch moment, a moment created from all the forces that acts on the vehicle. This moment has a direction relative to the center of gravity and usually very small if the shape of the body is symmetrical.

To see the effects of aerodynamic forces during cornering is really hard without the appropriate tools. By using analytical methods, these effects could be estimated by using the values from a straight line. From this project it could be seen that these values does not affect the double decker bus much as the weight is relatively very big to the aerodynamic forces making these forces seems insignificant. There may be differences if the experiment is done with proper equipment simulating the circular motion of the double decker bus but as far as this project concerns, there is no effect on performance from the aerodynamic lift and drag towards a cornering double decker bus.

5.2 Recommendation

This project has very high potential for continuation. There are many values that were neglected because it was deemed to be irrelevant to the objective of the project. For continuation, some values that could be considered are the presence of the suspension, the pitch moment, and also the road condition e.g. dry or wet, cement or asphalt.

Theoretically, if these additional values are considered, a very different result may be obtained. As example, suspension hangs the mass of the bus; therefore the weight would be less and could also affect the cornering speed of the vehicle.

This project could also be done to other types of commercial vehicles such as a lorry or a trailer.

REFERENCES

[1] http://www.americanflyers.net/aviationlibrary/pilots_handbook/images/chapter_2_img_21.jpg

[2] Barnard R. H., "Road Vehicle Aerodynamic Design," Longman, England, **1996**.

[3] Jewel B. Barlow, Rui Guterres, Robert Ranzenbach., "Experimental Parametric Study of Rectangular Bodies with Radiused Edges in Ground Effect," *Journal of Wind Engineering and Industrial Aerodynamics 96*, **2001:** p1291-1309.

[4] Simon Watkins, Giacchino Vino., "The Effect of Vehicle Spacing on the Aerodynamics of a Representative Car Shape," *Journal of Wind Engineering and Industrial Aerodynamics 96*, **2008**: p1232-1239.